REDEVELOPMENT OPPORTUNITY

# 3590 THOMAS ST

Memphis, TN 38127

CUSHMAN & WAKEFIELD | COMMERCIAL ADVISORS



**ONLINE AUCTION**
Friday, November 20th
12pm (Walker Auctions)

## OFFICE OR CREATIVE SPACE AVAILABLE

### +/- 3,417 SF Available

## PROPERTY HIGHLIGHTS

- 1.7 Acres +/-
- Approx. 3417 sq. ft. Uniquely Designed Structure
- Zoned CMU-1
- Shelby County Parcel # 069062 00031C
- Originally a residence, most recently a medical clinic
- Iconic Memphis property with excellent Hwy 51 visibility
- Shell condition, ready for redevelopment
- Potential uses: office, event center, gallery, spa, clinic, or residence

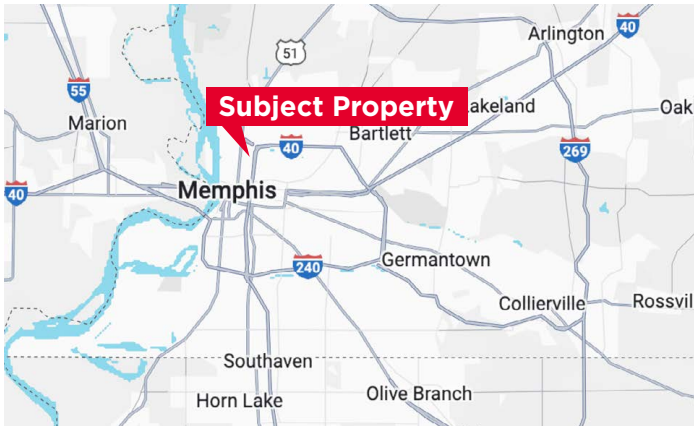


**CLICK HERE FOR AUCTION LISTING**

**Conner Walker**
Vice President
901 362 9862
cwalker@commadv.com

WALKER AUCTIONS
REAL ESTATE & PERSONAL PROPERTY
www.WalkerAuctions.com 901.493.1536

5101 Wheelis Drive, Suite 300
Memphis, TN 38117
Main: 901 366 6070
**www.commadv.com**

*Independently Owned and Operated / A Member of the Cushman & Wakefield Alliance*

Cushman & Wakefield Copyright 11/09/26. No warranty or representation, express or implied, is made to the accuracy or completeness of the information contained herein, and same is submitted subject to errors, omissions, change of price, rental or other conditions, withdrawal without notice, and to any special listing conditions imposed by the property owner(s). As applicable, we make no representation as to the condition of the property (or properties) in question.

REDEVELOPMENT OPPORTUNITY

# 3590 THOMAS ST

Memphis, TN 38127

CUSHMAN & WAKEFIELD | COMMERCIAL ADVISORS

# FLOOR PLANS

## MAIN LEVEL

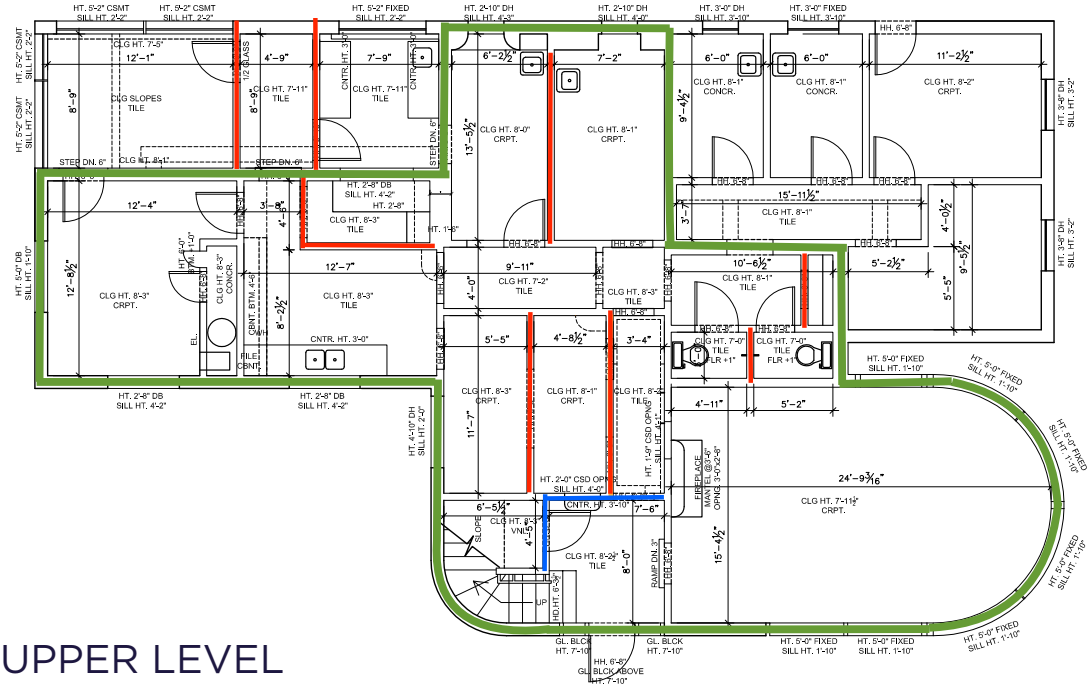

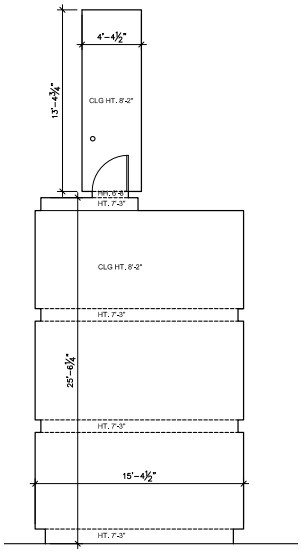

## UPPER LEVEL

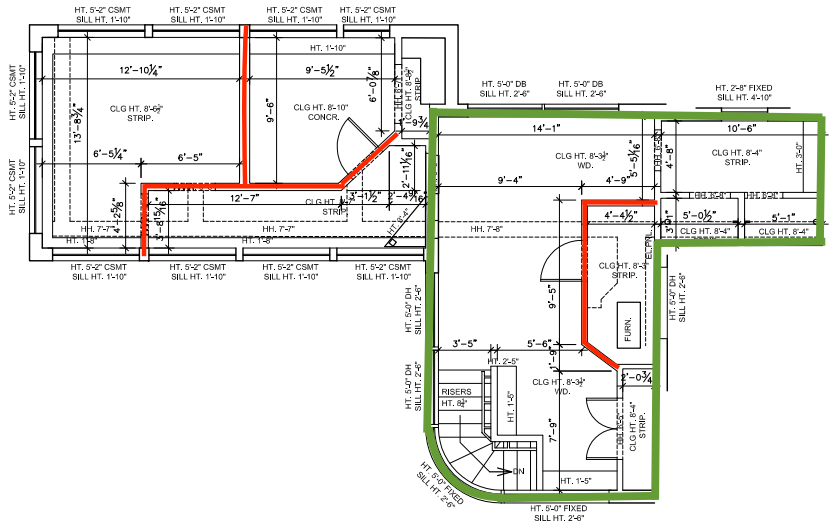

GREEN: Original perimeter of the house
RED: Non-original wall domolished
BLUE: Potentially original wall, but should it be demolished

## CLICK HERE FOR AUCTION LISTING

Property being auctioned in cooperation with Walker Auctions. Auction to close on November 20, 2026. To bid and to see more information visit: **https://www.walkerauctions.com/auction/historic-memphis-development-opportunity-84520/details**


**Conner Walker**
Vice President
901 362 9862
cwalker@commadv.com


WALKER AUCTIONS
REAL ESTATE & PERSONAL PROPERTY
www.WalkerAuctions.com 901.493.1936


5101 Wheelis Drive, Suite 300
Memphis, TN 38117
Main: 901 366 6070
**www.commadv.com**



*Independently Owned and Operated / A Member of the Cushman & Wakefield Alliance*

Cushman & Wakefield Copyright 11/09/26. No warranty or representation, express or implied, is made to the accuracy or completeness of the information contained herein, and same is submitted subject to errors, omissions, change of price, rental or other conditions, withdrawal without notice, and to any special listing conditions imposed by the property owner(s). As applicable, we make no representation as to the condition of the property (or properties) in question.

REDEVELOPMENT OPPORTUNITY

# 3590 THOMAS ST

Memphis, TN 38127

CUSHMAN & WAKEFIELD | COMMERCIAL ADVISORS

## PROPERTY PHOTOS













**Conner Walker**
Vice President
901 362 9862
cwalker@commadv.com

WALKER AUCTIONS
REAL ESTATE & PERSONAL PROPERTY
www.WalkerAuctions.com 901.493.1536

5101 Wheelis Drive, Suite 300
Memphis, TN 38117
Main: 901 366 6070
**www.commadv.com**

*Independently Owned and Operated / A Member of the Cushman & Wakefield Alliance*

Cushman & Wakefield Copyright 11/09/26. No warranty or representation, express or implied, is made to the accuracy or completeness of the information contained herein, and same is submitted subject to errors, omissions, change of price, rental or other conditions, withdrawal without notice, and to any special listing conditions imposed by the property owner(s). As applicable, we make no representation as to the condition of the property (or properties) in question.

REDEVELOPMENT OPPORTUNITY

# 3590 THOMAS ST

Memphis, TN 38127

CUSHMAN & WAKEFIELD | COMMERCIAL ADVISORS

## PROPERTY PHOTOS













**Conner Walker**
Vice President
901 362 9862
cwalker@commadv.com

WALKER AUCTIONS
REAL ESTATE & PERSONAL PROPERTY
www.WalkerAuctions.com 901.493.1536

5101 Wheelis Drive, Suite 300
Memphis, TN 38117
Main: 901 366 6070
**www.commadv.com**

*Independently Owned and Operated / A Member of the Cushman & Wakefield Alliance*

Cushman & Wakefield Copyright 11/09/26. No warranty or representation, express or implied, is made to the accuracy or completeness of the information contained herein, and same is submitted subject to errors, omissions, change of price, rental or other conditions, withdrawal without notice, and to any special listing conditions imposed by the property owner(s). As applicable, we make no representation as to the condition of the property (or properties) in question.